Work Order ID 74223 LH

Tuesday, September 27, 2011 12:29:46 PM

Left Hand

Item ID: D206-642-151 **Accept** **Setup Start** **Stop**

Revision ID:

Item Name: Replacement Skidtube

Start Date: 10/3/2011 **Start Qty:** 1.00 **Cust Item ID:**

Required Date: 11/4/2011 **Req'd Qty:** 1.00 **Customer:**

Reference:

Approvals: **Process Plan:** vmf **Date:** 11-09-28 **Tooling:** _____ **Date:** _____ **Run Start** **Stop**

QC: _____ **Date:** _____ **SPC (Y/N):** _____ **Date:** _____

Sequence ID/ Work Center ID	Operation Description	Set Up/ Run Hours	Tool ID	Tool #	Plan Code	Accept Qty	Reject Qty	Reject Number	Insp. Stamp
100	DOCUMENT CONTROL	0.00							
DC		0.00							
Document Control	Memo: Photocopy bluefile & type labels per PPP D206-642-151 CHG001								

Draw Nbr	Revision Nbr
D3804	A
IIN-D206-642	O

N/A

Dart Aerospace Ltd

W/O:		WORK ORDER CHANGES					
DATE	STEP	PROCEDURE CHANGE	By	Date	Qty	Approval Chief Eng / Prod Mgr	Approval QC Inspector

Part No: _____ **PAR #:** _____ **Fault Category:** _____ **NCR:** Yes No **DQA:** _____ **Date:** _____

Resolution: _____ **Disposition:** _____ **QA: N/C Closed:** _____ **Date:** _____

NCR:		WORK ORDER NON-CONFORMANCE (NCR)						
DATE	STEP	Description of NC Section A	Corrective Action Section B			Verification Section C	Approval Chief Eng	Approval QC Inspector
			Initial Chief Eng	Action Description Chief Eng	Sign & Date			

NOTE: Date & initial all entries

Work Order ID 74223

Tuesday, September 27, 2011 12:29:46 PM

Item ID: D206-642-151 **Accept** **Setup Start** **Stop**

Revision ID:

Item Name: Replacement Skidtube

Start Date: 10/3/2011 **Start Qty:** 1.00 **Cust Item ID:**

Required Date: 11/4/2011 **Req'd Qty:** 1.00 **Customer:**

Reference:

Run Start **Stop**

Approvals: **Process Plan:** _____ **Date:** _____ **Tooling:** _____ **Date:** _____

QC: _____ **Date:** _____ **SPC (Y/N):** _____ **Date:** _____

Sequence ID/ Work Center ID	Operation Description	Set Up/ Run Hours	Tool ID	Tool #	Plan Code	Accept Qty	Reject Qty	Reject Number	Insp. Stamp
110	Skidtubes	0.00							
Skidtubes		0.00							
Skidtubes									

Memo

1-Deburr Fwd edge of tube

2- Remove ridge on inside of Fwd edge of tube as per Dwg D3804 DP 11-10-15

3-Weld Fwd Cap as per Dwg D3804. Use aluminum rod. Grind D2647 to fit as required.
Pick:
Qty ☐Part Number☐ Description☐Batch
A/R☐☐ Aluminum Rod☐ M117884/M118736 BC 11/10/18

4-Grind weld flush to cap on top surface only.

5-Cut Aft end as per dwg D3804 from front of tube and Deburr SAD 11-10-21

6-Remove inner indexing ridge on Aft end of skidtube as per Dwg D3804

7-Open holes for Aft end cap as per Dwg D3804 with #30 Drill Bit using DT8025. SAD 11-10-21

8-Drill pilot holes using Dt8166 & DT8169D & DT9771.

9-Locate DT8732 from inner Aft saddle hole & 3rd crossbolt hole. Insert D3286-1 doubler using DT8732 & D206-642-241-T1, then locating doubler off of 3/16" holes, cleco DT8732 & doubler leaving DT8732 for added support.

10- Drill D3286-1 doubler rivet holes in tube using # 30 drill, spot drilling doubler at the same time. DL 11/10/25

Dart Aerospace Ltd

W/O:		WORK ORDER CHANGES					
DATE	STEP	PROCEDURE CHANGE	By	Date	Qty	Approval Chief Eng / Prod Mgr	Approval QC Inspector

Part No: _____ **PAR #:** _____ **Fault Category:** _____ **NCR:** Yes No **DQA:** _____ **Date:** _____

Resolution: _____ **Disposition:** _____ **QA: N/C Closed:** _____ **Date:** _____

NCR:		WORK ORDER NON-CONFORMANCE (NCR)						
DATE	STEP	Description of NC Section A	Corrective Action Section B			Verification Section C	Approval Chief Eng	Approval QC Inspector
			Initial Chief Eng	Action Description Chief Eng	Sign & Date			

NOTE: Date & initial all entries

Work Order ID 74223

Tuesday, September 27, 2011 12:29:46 PM

Item ID: D206-642-151 **Accept** **Setup Start** **Stop**

Revision ID:

Item Name: Replacement Skidtube

Start Date: 10/3/2011 **Start Qty:** 1.00 **Cust Item ID:**

Required Date: 11/4/2011 **Req'd Qty:** 1.00 **Customer:**

Reference:

Run Start **Stop**

Approvals: **Process Plan:** _____ **Date:** _____ **Tooling:** _____ **Date:** _____

QC: _____ **Date:** _____ **SPC (Y/N):** _____ **Date:** _____

Sequence ID/ Work Center ID	Operation Description	Set Up/ Run Hours	Tool ID	Tool #	Plan Code	Accept Qty	Reject Qty	Reject Number	Insp. Stamp
	11-Working from the center out, drill # 30 holes into D3286-1 doubler. Cleco each hole as it is being drilled. Verify angle of holes to accommodate rivet heads. 12-Remove 3/16" cleco's only and open GHW holes to Ø0.500" as per Dwg D3804 13-Remove D3286-1 doubers, identify orientation, deburr, then attach them to the workorder 14-Remove indexing edge using DT8741 as per Dwg D3804 15-C'sink GHW rivet holes as per Dwg D3804 16- Open Aft cap hole #6. ****no wearplate holes for this skidtube**** 17-Deburr tube and blow out chips from inside the tube								
120 QC Quality Control	QC6- Inspect dimensions to drawing	0.00							
	Memo	0.00							

DL 11/10/25

8 11/10/25

Dart Aerospace Ltd

W/O:		WORK ORDER CHANGES					
DATE	STEP	PROCEDURE CHANGE	By	Date	Qty	Approval Chief Eng / Prod Mgr	Approval QC Inspector

Part No: _____ **PAR #:** _____ **Fault Category:** _____ **NCR:** Yes No **DQA:** _____ **Date:** _____

Resolution: _____ **Disposition:** _____ **QA: N/C Closed:** _____ **Date:** _____

NCR:		WORK ORDER NON-CONFORMANCE (NCR)						
DATE	STEP	Description of NC Section A	Corrective Action Section B			Verification Section C	Approval Chief Eng	Approval QC Inspector
			Initial Chief Eng	Action Description Chief Eng	Sign & Date			

NOTE: Date & initial all entries

Work Order ID 74223

Tuesday, September 27, 2011 12:29:46 PM

Item ID: D206-642-151 **Accept** **Setup Start** **Stop**

Revision ID:

Item Name: Replacement Skidtube

Start Date: 10/3/2011 **Start Qty:** 1.00 **Cust Item ID:**

Required Date: 11/4/2011 **Req'd Qty:** 1.00 **Customer:**

Reference:

Run Start **Stop**

Approvals: **Process Plan:** _____ **Date:** _____ **Tooling:** _____ **Date:** _____

QC: _____ **Date:** _____ **SPC (Y/N):** _____ **Date:** _____

Sequence ID/ Work Center ID	Operation Description	Set Up/ Run Hours	Tool ID	Tool #	Plan Code	Accept Qty	Reject Qty	Reject Number	Insp. Stamp
140	Chemical Conversion Coat per QSI005 4.1	0.00							
HandFinish	**Memo**	0.00				0		SAD 11-10-25	
Hand Finishing									
150	QC3- Inspect Part Finish	0.00				1	0	BEC 11/10/25	
QC	**Memo**	0.00							
Quality Control									
160		0.00							
Skidtubes	Skidtubes								
Skidtubes	**Memo**	0.00							

1-Open holes to finished size as per Dwg D3804, (without cutting fluid)

2-C'sink crossbolt spacer holes as per Dwg D3804(without cutting fluid)

3-Deburr and blow out all chips from inside the tube

DC 11/10/25

Dart Aerospace Ltd

W/O:		WORK ORDER CHANGES					
DATE	STEP	PROCEDURE CHANGE	By	Date	Qty	Approval Chief Eng / Prod Mgr	Approval QC Inspector

Part No: _____ **PAR #:** _____ **Fault Category:** _____ **NCR:** Yes No **DQA:** _____ **Date:** _____

Resolution: _____ **Disposition:** _____ **QA: N/C Closed:** _____ **Date:** _____

NCR:		WORK ORDER NON-CONFORMANCE (NCR)						
DATE	STEP	Description of NC Section A	Corrective Action Section B			Verification Section C	Approval Chief Eng	Approval QC Inspector
			Initial Chief Eng	Action Description Chief Eng	Sign & Date			

NOTE: Date & initial all entries

Work Order ID 74223

Tuesday, September 27, 2011 12:29:46 PM

Item ID: D206-642-151 **Accept** **Setup Start** **Stop**

Revision ID:

Item Name: Replacement Skidtube

Start Date: 10/3/2011 **Start Qty:** 1.00 **Cust Item ID:**

Required Date: 11/4/2011 **Req'd Qty:** 1.00 **Customer:**

Reference:

Run Start **Stop**

Approvals: **Process Plan:** _____ **Date:** _____ **Tooling:** _____ **Date:** _____

QC: _____ **Date:** _____ **SPC (Y/N):** _____ **Date:** _____

Sequence ID/ Work Center ID	Operation Description	Set Up/ Run Hours	Tool ID	Tool #	Plan Code	Accept Qty	Reject Qty	Reject Number	Insp. Stamp
170	QC6- Inspect dimensions to drawing	0.00				1	Ø	BE	11/10/25
QC Quality Control	**Memo**	0.00							
180		0.00							
Skidtubes	Skidtubes								
Skidtubes	**Memo**	0.00							

1-Locate, install and rivet doublers as per Dwg D3804. Micro-shave rivets as required DL 11/10/25

2-Bond D2654-3 web in place as per QSI 015. Ensure holes line up.Allow 12 Hrs. cure time before cutting

Start Date:☐ 4h30 ☐Time:☐ 11-10-25 ☐

Finish Date:☐ 11/10/26 ☐Time:☐ 2:00

Pick:

Qty ☐Part Number☐Description☐Batch

A/R☐☐Sikaflex-291☐ M118393 ☐☐

Sikaflex expire date:☐ 12-05-05

SAD 11-10-25 (1)

Dart Aerospace Ltd

W/O:		WORK ORDER CHANGES					
DATE	STEP	PROCEDURE CHANGE	By	Date	Qty	Approval Chief Eng / Prod Mgr	Approval QC Inspector

Part No: _____ **PAR #:** _____ **Fault Category:** _____ **NCR:** Yes No **DQA:** _____ **Date:** _____

Resolution: _____ **Disposition:** _____ **QA: N/C Closed:** _____ **Date:** _____

NCR:		WORK ORDER NON-CONFORMANCE (NCR)						
DATE	STEP	Description of NC Section A	Corrective Action Section B			Verification Section C	Approval Chief Eng	Approval QC Inspector
			Initial Chief Eng	Action Description Chief Eng	Sign & Date			

NOTE: Date & initial all entries

H:\fFORMS\Quality Assurance\approved QA\NCRWO RevE

Work Order ID 74223

Tuesday, September 27, 2011 12:29:46 PM

Item ID: D206-642-151 **Accept** **Setup Start**

Revision ID: **Stop**

Item Name: Replacement Skidtube

Start Date: 10/3/2011 **Start Qty:** 1.00 **Cust Item ID:**

Required Date: 11/4/2011 **Req'd Qty:** 1.00 **Customer:**

Reference:

Run Start

Approvals: **Process Plan:** _____ **Date:** _____ **Tooling:** _____ **Date:** _____

Stop

QC: _____ **Date:** _____ **SPC (Y/N):** _____ **Date:** _____

Sequence ID/ Work Center ID	Operation Description	Set Up/ Run Hours	Tool ID	Tool #	Plan Code	Accept Qty	Reject Qty	Reject Number	Insp. Stamp
190	QC5- Inspect part completeness to step on W/O	0.00				1	0		BG 11/10/26
QC Quality Control	**Memo**	0.00							

Dart Aerospace Ltd

W/O:		WORK ORDER CHANGES					
DATE	STEP	PROCEDURE CHANGE	By	Date	Qty	Approval Chief Eng / Prod Mgr.	Approval QC Inspector

Part No: _____ **PAR #:** _____ **Fault Category:** _____ **NCR:** Yes No **DQA:** _____ **Date:** _____

Resolution: _____ **Disposition:** _____ **QA: N/C Closed:** _____ **Date:** _____

NCR:		WORK ORDER NON-CONFORMANCE (NCR)						
DATE	STEP	Description of NC Section A	Corrective Action Section B			Verification Section C	Approval Chief Eng	Approval QC Inspector
			Initial Chief Eng	Action Description Chief Eng	Sign & Date			

NOTE: Date & initial all entries

Work Order ID 74223

Tuesday, September 27, 2011 12:29:46 PM

Item ID: D206-642-151 **Accept** **Setup Start**

Revision ID:

Item Name: Replacement Skidtube **Stop**

Start Date: 10/3/2011 **Start Qty:** 1.00 **Cust Item ID:**

Required Date: 11/4/2011 **Req'd Qty:** 1.00 **Customer:**

Reference:

Approvals: **Process Plan:** _____ **Date:** _____ **Tooling:** _____ **Date:** _____ **Run Start**

QC: _____ **Date:** _____ **SPC (Y/N):** _____ **Date:** _____ **Stop**

Sequence ID/ Work Center ID	Operation Description	Set Up/ Run Hours	Tool ID	Tool #	Plan Code	Accept Qty	Reject Qty	Reject Number	Insp. Stamp
200		0.00							
Skidtubes	Skidtubes								
Skidtubes	**Memo**	0.00							

1-remove alodine from around hole and prepare for welding

2-Prep per QSI 005 and Insert D2649 crossbolt spacers. Weld as per QSI 004 and Dwg D3804. Remember to back drill each hole to 0.25" before welding the other side. Use aluminum rod. BE 11/10/26

Pick:

Qty□Part Number□Description□Batch

A/R□□Aluminum Rod□ M117884

3-Grind welds flush as per Dwg D3804. BB / 11/10/26.

4-Using DT8733, insert (2) D3286-3 spacers as per QSI 004 and Dwg D3804. Remember to back drill each hole to Ø0.402" before welding other side. Use SS rod as required.

A/R□SS Rod□ NONE BE 11/10/26

5-Counterbore 5/16" x 0.750" deep except 7th hole from Aft end as per Dwg D3804. Deburr DP 11-10-27

Dart Aerospace Ltd

W/O:		WORK ORDER CHANGES					
DATE	STEP	PROCEDURE CHANGE	By	Date	Qty	Approval Chief Eng / Prod Mgr	Approval QC Inspector

Part No: _____ **PAR #:** _____ **Fault Category:** _____ **NCR:** Yes No **DQA:** _____ **Date:** _____

Resolution: _____ **Disposition:** _____ **QA: N/C Closed:** _____ **Date:** _____

NCR:		WORK ORDER NON-CONFORMANCE (NCR)						
DATE	STEP	Description of NC Section A	Corrective Action Section B			Verification Section C	Approval Chief Eng	Approval QC Inspector
			Initial Chief Eng	Action Description Chief Eng	Sign & Date			

NOTE: Date & initial all entries

Work Order ID 74223

Tuesday, September 27, 2011 12:29:47 PM

Item ID: D206-642-151 **Accept** **Setup** **Start**

Revision ID: **Stop**

Item Name: Replacement Skidtube

Start Date: 10/3/2011 **Start Qty:** 1.00 **Cust Item ID:**

Required Date: 11/4/2011 **Req'd Qty:** 1.00 **Customer:**

Reference:

Run **Start** **Stop**

Approvals: **Process Plan:** _____ **Date:** _____ **Tooling:** _____ **Date:** _____

QC: _____ **Date:** _____ **SPC (Y/N):** _____ **Date:** _____

Sequence ID/ Work Center ID	Operation Description	Set Up/ Run Hours	Tool ID	Tool #	Plan Code	Accept Qty	Reject Qty	Reject Number	Insp. Stamp
210	HandFinishing	0.00							
HandFinish									
Hand Finishing	**Memo** Install D2680-041 Nut Plate as per Dwg D3804	0.00							
215	QC9- Inspect visual per QSI004- Fusion Welds	0.00							
QC	**Memo**	0.00							
Quality Control									
220	QC10- Inspect visual per QSI004- ground welds	0.00							
QC	**Memo**	0.00							
Quality Control									

DP 11-10-27

11.10.27

S 11/10/27

Dart Aerospace Ltd

W/O:		WORK ORDER CHANGES					
DATE	STEP	PROCEDURE CHANGE	By	Date	Qty	Approval Chief Eng / Prod Mgr	Approval QC Inspector

Part No: _____ **PAR #:** _____ **Fault Category:** _____ **NCR:** Yes No **DQA:** _____ **Date:** _____

Resolution: _____ **Disposition:** _____ **QA: N/C Closed:** _____ **Date:** _____

NCR:		WORK ORDER NON-CONFORMANCE (NCR)						
DATE	STEP	Description of NC Section A	Corrective Action Section B			Verification Section C	Approval Chief Eng	Approval QC Inspector
			Initial Chief Eng	Action Description Chief Eng	Sign & Date			

NOTE: Date & initial all entries

Work Order ID 74223

Tuesday, September 27, 2011 12:29:47 PM

Item ID: D206-642-151 **Accept** **Setup** **Start**

Revision ID: **Stop**

Item Name: Replacement Skidtube

Start Date: 10/3/2011 **Start Qty:** 1.00 **Cust Item ID:**

Required Date: 11/4/2011 **Req'd Qty:** 1.00 **Customer:**

Reference:

Run **Start** **Stop**

Approvals: **Process Plan:** _____ **Date:** _____ **Tooling:** _____ **Date:** _____

QC: _____ **Date:** _____ **SPC (Y/N):** _____ **Date:** _____

Sequence ID/ Work Center ID	Operation Description	Set Up/ Run Hours	Tool ID	Tool #	Plan Code	Accept Qty	Reject Qty	Reject Number	Insp. Stamp
230	QC5- Inspect part completeness to step on W/O	0.00							
QC	Memo	0.00							
Quality Control									
240	Pressure Wash per QSI005 4.3	0.00							
HandFinish	Memo	0.00				1		11-10-28	
Hand Finishing									
250	White Gloss(Ref:4.3.5.1) per QSI005 4.3-Alum	0.00							
Powdercoat	Memo	0.00							
Powder Coating	START TIME: 8:00 OVEN TEMPERATURE: 320 0F FINISH TIME: 8:30								

M118439

1X Ø 11/11/01

Dart Aerospace Ltd

W/O:		WORK ORDER CHANGES					
DATE	STEP	PROCEDURE CHANGE	By	Date	Qty	Approval Chief Eng / Prod Mgr	Approval QC Inspector

Part No: _____ **PAR #:** _____ **Fault Category:** _____ **NCR:** Yes No **DQA:** _____ **Date:** _____

Resolution: _____ **Disposition:** _____ **QA: N/C Closed:** _____ **Date:** _____

NCR:		WORK ORDER NON-CONFORMANCE (NCR)						
DATE	STEP	Description of NC Section A	Corrective Action Section B			Verification Section C	Approval Chief Eng	Approval QC Inspector
			Initial Chief Eng	Action Description Chief Eng	Sign & Date			

NOTE: Date & initial all entries

Work Order ID 74223 WH

Tuesday, September 27, 2011 12:29:47 PM

Item ID: D206-642-151 **Accept** **Setup Start** **Stop**

Revision ID:

Item Name: Replacement Skidtube

Start Date: 10/3/2011 **Start Qty:** 1.00 **Cust Item ID:**

Required Date: 11/4/2011 **Req'd Qty:** 1.00 **Customer:**

Reference:

Run Start **Stop**

Approvals: **Process Plan:** _____ **Date:** _____ **Tooling:** _____ **Date:** _____

QC: _____ **Date:** _____ **SPC (Y/N):** _____ **Date:** _____

Sequence ID/ Work Center ID	Operation Description	Set Up/ Run Hours	Tool ID	Tool #	Plan Code	Accept Qty	Reject Qty	Reject Number	Insp. Stamp
260	QC3- Inspect Part Finish	0.00							
QC	**Memo**	0.00				1 WH	ø	MU	4/4/01
Quality Control									
270		0.00							
HandFinish	HandFinishing					1 WH	ø	MU	4/4/01
Hand Finishing	**Memo**	0.00							

1-Install D2651-3 O-Rings on D2651-1 plugs with Petroleum Jelly and install plugs as per Dwg D3804. Clean excess adhesive.

Dart Aerospace Ltd

W/O:		WORK ORDER CHANGES					
DATE	STEP	PROCEDURE CHANGE	By	Date	Qty	Approval Chief Eng / Prod Mgr	Approval QC Inspector

Part No: _____ **PAR #:** _____ **Fault Category:** _____ **NCR:** Yes No **DQA:** _____ **Date:** _____

Resolution: _____ **Disposition:** _____ **QA: N/C Closed:** _____ **Date:** _____

NCR:		WORK ORDER NON-CONFORMANCE (NCR)						
DATE	STEP	Description of NC Section A	Corrective Action Section B			Verification Section C	Approval Chief Eng	Approval QC Inspector
			Initial Chief Eng	Action Description Chief Eng	Sign & Date			

NOTE: Date & initial all entries

Work Order ID 74223

Tuesday, September 27, 2011 12:29:47 PM

Item ID: D206-642-151 **Accept** **Setup Start** **Stop**

Revision ID:

Item Name: Replacement Skidtube

Start Date: 10/3/2011 **Start Qty:** 1.00 **Cust Item ID:**

Required Date: 11/4/2011 **Req'd Qty:** 1.00 **Customer:**

Reference:

Run Start **Stop**

Approvals: **Process Plan:** _____ **Date:** _____ **Tooling:** _____ **Date:** _____

QC: _____ **Date:** _____ **SPC (Y/N):** _____ **Date:** _____

Sequence ID/ Work Center ID	Operation Description	Set Up/ Run Hours	Tool ID	Tool #	Plan Code	Accept Qty	Reject Qty	Reject Number	Insp. Stamp
280	HandFinishing	0.00							
HandFinish						1hH	ϕ	M	11/14/11
Hand Finishing	**Memo**	0.00							
	1-Install D2646 Aft Cap and seal with Sikaflex. Clean excess adhesive A/R□□Sikaflex-291□ M119413□ Sikaflex expire date:□ 12/01								
	2- Install wearplate as per dwg								
	2-Wing Walk as per Dwg D3804 and QSI 005 4.4□ Batch: M118988								
290	QC3- Inspect Part Finish	0.00							
QC									
Quality Control	**Memo**	0.00							

Dart Aerospace Ltd

W/O:		WORK ORDER CHANGES					
DATE	STEP	PROCEDURE CHANGE	By	Date	Qty	Approval Chief Eng / Prod Mgr	Approval QC Inspector

Part No: _____ **PAR #:** _____ **Fault Category:** _____ **NCR:** Yes No **DQA:** _____ **Date:** _____

Resolution: _____ **Disposition:** _____ **QA: N/C Closed:** _____ **Date:** _____

NCR:		WORK ORDER NON-CONFORMANCE (NCR)						
DATE	STEP	Description of NC Section A	Corrective Action Section B			Verification Section C	Approval Chief Eng	Approval QC Inspector
			Initial Chief Eng	Action Description Chief Eng	Sign & Date			

NOTE: Date & initial all entries

Work Order ID 74223

Tuesday, September 27, 2011 12:29:47 PM

Item ID: D206-642-151 **Accept** **Setup Start** **Stop**

Revision ID:

Item Name: Replacement Skidtube

Start Date: 10/3/2011 **Start Qty:** 1.00 **Cust Item ID:**

Required Date: 11/4/2011 **Req'd Qty:** 1.00 **Customer:**

Reference:

Run Start **Stop**

Approvals: **Process Plan:** _____ **Date:** _____ **Tooling:** _____ **Date:** _____

QC: _____ **Date:** _____ **SPC (Y/N):** _____ **Date:** _____

Sequence ID/ Work Center ID	Operation Description	Set Up/ Run Hours	Tool ID	Tool #	Plan Code	Accept Qty	Reject Qty	Reject Number	Insp. Stamp
300 QC Quality Control	QC5- Inspect part completeness to step on W/O	0.00 Sulula				H			
	Memo	0.00				Lk			
310 Packaging Packaging	Packaging	0.00				11/11/16			
	Memo Identify and pack for shipping as per PPP D206-642-151 Location:_____ PPP Rev:_____	0.00 PPP 74338							
320 QC Quality Control	QC21- Final Inspection - Work Order Release	0.00						11/11/17	
	Memo	0.00							

MF 11-11-16

Dart Aerospace Ltd

W/O:		WORK ORDER CHANGES					
DATE	STEP	PROCEDURE CHANGE	By	Date	Qty	Approval Chief Eng / Prod Mgr	Approval QC Inspector

Part No: _____ **PAR #:** _____ **Fault Category:** _____ **NCR:** Yes No **DQA:** _____ **Date:** _____

Resolution: _____ **Disposition:** _____ **QA: N/C Closed:** _____ **Date:** _____

NCR:		WORK ORDER NON-CONFORMANCE (NCR)						
DATE	STEP	Description of NC Section A	Corrective Action Section B			Verification Section C	Approval Chief Eng	Approval QC Inspector
			Initial Chief Eng	Action Description Chief Eng	Sign & Date			

NOTE: Date & initial all entries

Picklist Print

Tuesday, September 27, 2011 12:29:40 PM

8

Work Order ID: 74223

Parent Item: D206-642-151

Parent Item Name: Replacement Skidtube

Start Date: 10/3/2011 **Required Date:** 11/4/2011

Start Qty: 1.00 **Required Qty:** 1.00

Comments: IPP REV:A 10.12.08 PER IIN REV.N DD VERF:EC IPP
REV:B 11.09.16 PER IIN REV.O DD VERF:EC

Component Item ID/ Item Name	Replacement Item ID	Mfg/ Purch	Bin Item	Primary Location	Last Location	Route Seq ID	Unit of Measure	Qty on Hand	Qty per Kit	Total Qty	Qty Issued	Date Issued	Status
D2620		Manufactured	No			110	Each	23.0000	1	1			
Skidtube, 206 Skidtube													

Location	Loc Qty	Loc Code
LG 73783	23	
71616	5	
71617	6	
73781	5	
73786	3	
73787	4	

11-10-15

D2647		Manufactured	No			110	Each	36.0000	1	1			
Cap													

BG 11/10/18
B 73826 ×1

Location	Loc Qty	Loc Code
LG002	36	
55352	8	
71171	28	

CR3212-4-04		Purchased	No			180	Each	10,997.00	52	52			
Cherry Rivet													

Location	Loc Qty	Loc Code
ST311	997	
116471	78	
117816	179	
118686	1	
118840	739	
ST516	10000	
119017	10000	

53

DL
11/10/26

Dart Aerospace Ltd

W/O:		WORK ORDER CHANGES					
DATE	STEP	PROCEDURE CHANGE	By	Date	Qty	Approval Chief Eng / Prod Mgr	Approval QC Inspector

Part No: _____ **PAR #:** _____ **Fault Category:** _____ **NCR:** Yes No **DQA:** _____ **Date:** _____

Resolution: _____ **Disposition:** _____ **QA: N/C Closed:** _____ **Date:** _____

NCR:		WORK ORDER NON-CONFORMANCE (NCR)						
DATE	STEP	Description of NC Section A	Corrective Action Section B			Verification Section C	Approval Chief Eng.	Approval QC Inspector
			Initial Chief Eng	Action Description Chief Eng	Sign & Date			

NOTE: Date & initial all entries

H:\fFORMS\Quality Assurance\approved QA\NCRWO RevE

Picklist Print

Tuesday, September 27, 2011 12:29:41 PM

Work Order ID: 74223

Parent Item: D206-642-151

Parent Item Name: Replacement Skidtube

Start Date: 10/3/2011 **Required Date:** 11/4/2011

Start Qty: 1.00 **Required Qty:** 1.00

D2654-1	Manufactured	No	180	Each	12.0000	1	1	SAJ 11-10-25
Web								

Location	Loc Qty	Loc Code
LG	12	
73789	10	B73793
73790	2	V

D3286-1	Manufactured	No	180	Each	80.0000	2	2	
Doubler								

Location	Loc Qty	Loc Code
LG002	80	
~~64562~~	6	2
74111	74	

DL 11/10/26

D2649	Manufactured	No	200	Each	1,995.000	19	19	BG 11/10/26
Cross Bolt Spacer								

Location	Loc Qty	Loc Code
LG	736	
68224	2	
71355	2	
72704	2	
72841	130	
73855	600	
LG001	1259	
65317	1	
68507	11	
73390	47	
73857	600	
73860	600	19

Dart Aerospace Ltd

W/O:		WORK ORDER CHANGES					
DATE	STEP	PROCEDURE CHANGE	By	Date	Qty	Approval Chief Eng / Prod Mgr	Approval QC Inspector

Part No: _____ **PAR #:** _____ **Fault Category:** _____ **NCR:** Yes No **DQA:** _____ **Date:** _____

Resolution: _____ **Disposition:** _____ **QA: N/C Closed:** _____ **Date:** _____

NCR:		WORK ORDER NON-CONFORMANCE (NCR)						
DATE	STEP	Description of NC Section A	Corrective Action Section B			Verification Section C	Approval Chief Eng	Approval QC Inspector
			Initial Chief Eng	Action Description Chief Eng	Sign & Date			

NOTE: Date & initial all entries

Picklist Print

Tuesday, September 27, 2011 12:29:41 PM

Work Order ID: 74223

Parent Item: D206-642-151

Parent Item Name: Replacement Skidtube

Start Date: 10/3/2011 **Required Date:** 11/4/2011

Start Qty: 1.00 **Required Qty:** 1.00

D3286-3 Spacer	Manufactured	No	200	Each	98.0000	2	2	

Location	Loc Qty	Loc Code
LG001	83	
74117	83	
LG002	15	
64564	15	

D2680-041 Nut Plate	Manufactured	No	210	Each	40.0000	1	1	

Location	Loc Qty	Loc Code
LG 73854	40	
73334	40	

CR3212-4-03 Cherry Rivet	Purchased	No	210	Each	2,116.000	2	2	

Location	Loc Qty	Loc Code
FP-B	2	
110139	2	
ST311	1114	
114859	1114	
ST318	1000	
119017	1000	

AN960JD416 NAS1149D0463J Washer	Purchased	No	210	Each	0.0000	1	1	

Dart Aerospace Ltd

W/O:		WORK ORDER CHANGES					
DATE	STEP	PROCEDURE CHANGE	By	Date	Qty	Approval Chief Eng / Prod Mgr	Approval QC Inspector

Part No: _____ **PAR #:** _____ **Fault Category:** _____ **NCR:** Yes No **DQA:** _____ **Date:** _____

Resolution: _____ **Disposition:** _____ **QA: N/C Closed:** _____ **Date:** _____

NCR:		WORK ORDER NON-CONFORMANCE (NCR)						
DATE	STEP	Description of NC Section A	Corrective Action Section B			Verification Section C	Approval Chief Eng	Approval QC Inspector
			Initial Chief Eng	Action Description Chief Eng	Sign & Date			

NOTE: Date & initial all entries

H:\FORMS\Quality Assurance\approved QA\NCRWO RevE

Picklist Print

Tuesday, September 27, 2011 12:29:42 PM

Work Order ID: 74223

Parent Item: D206-642-151

Parent Item Name: Replacement Skidtube

Start Date: 10/3/2011 **Required Date:** 11/4/2011

Start Qty: 1.00 **Required Qty:** 1.00

CCR264SS3-3 Cherry Rivet	Purchased	No	210	Each	1,401.000	2	2	

Location	Loc Qty	Loc Code
FP-B	2	
113973	2	
ST311	399	
117086	21	
117849	378	
ST317	1000	
119017	1000	

(2) 11-10-27

MS27039-4-06 Screw	Purchased	No	210	Each	29.0000	1	1	

Location	Loc Qty	Loc Code
FP-A	8	M119124
115460	8	
ST292	21	
115460	21	

X 1

D2651-1 Plug	Manufactured	No	270	Each	289.0000	6	6	

Location	Loc Qty	Loc Code
fpa	109	B73827
69018	109	
FP-A	180	
57869	1	
66445	10	
67760	36	
70691	100	
70839	2	
71037	31	

X 6

Dart Aerospace Ltd

W/O:		WORK ORDER CHANGES					
DATE	STEP	PROCEDURE CHANGE	By	Date	Qty	Approval Chief Eng / Prod Mgr	Approval QC Inspector

Part No: _____ **PAR #:** _____ **Fault Category:** _____ **NCR:** Yes No **DQA:** _____ **Date:** _____

Resolution: _____ **Disposition:** _____ **QA: N/C Closed:** _____ **Date:** _____

NCR:		WORK ORDER NON-CONFORMANCE (NCR)						
DATE	STEP	Description of NC Section A	Corrective Action Section B			Verification Section C	Approval Chief Eng	Approval QC Inspector
			Initial Chief Eng	Action Description Chief Eng	Sign & Date			

NOTE: Date & initial all entries

H:\FORMS\Quality Assurance\approved QA\NCRWO RevE

Picklist Print

Tuesday, September 27, 2011 12:29:42 PM

Work Order ID: 74223

Parent Item: D206-642-151

Parent Item Name: Replacement Skidtube

Start Date: 10/3/2011 **Required Date:** 11/4/2011

Start Qty: 1.00 **Required Qty:** 1.00

D2651-3 O-Ring	Manufactured	No	270	Each	1,799.000	6	6	

Location	Loc Qty	Loc Code	
FP-A	1799		
61962	12		
66956	282		
73489	505		x 6
73828	1000		

D3873-1 Bushing	Manufactured	No	280	Each	599.0000	14	14	

Location	Loc Qty	Loc Code	
ST084	4		
68247	4	B73831	x14
ST088	595		
64760	1		
70690	47		
71837	87		
73399	60		
73829	400		

Dart Aerospace Ltd

W/O:		WORK ORDER CHANGES					
DATE	STEP	PROCEDURE CHANGE	By	Date	Qty	Approval Chief Eng / Prod Mgr	Approval QC Inspector

Part No: _____ **PAR #:** _____ **Fault Category:** _____ **NCR:** Yes No **DQA:** _____ **Date:** _____

Resolution: _____ **Disposition:** _____ **QA: N/C Closed:** _____ **Date:** _____

NCR:		WORK ORDER NON-CONFORMANCE (NCR)						
DATE	STEP	Description of NC Section A	Corrective Action Section B			Verification Section C	Approval Chief Eng	Approval QC Inspector
			Initial Chief Eng	Action Description Chief Eng	Sign & Date			

NOTE: Date & initial all entries

H:\fFORMS\Quality Assurance\approved QA\NCRWO RevE

Picklist Print

Tuesday, September 27, 2011 12:29:42 PM

Work Order ID: 74223

Parent Item: D206-642-151

Parent Item Name: Replacement Skidtube

Start Date: 10/3/2011 **Required Date:** 11/4/2011

Start Qty: 1.00 **Required Qty:** 1.00

D2646 Aft Cap	Manufactured	No	280	Each	87.0000	1	1	

Location		Loc Qty	Loc Code	
FP004		43		
	68280	43		
FP006		5		
	62678	5		
FP-4		35		
	70945	1		
	71070	34	B73294	X1
fp5		4		
	71038	4		

D3805-041 Wearplate Assembly Fwd, Low Gear	Manufactured	No	280	Each	0.0000	1	1	B74893
MS27039-1-08 Screw	Purchased	No	280	Each	1,216.000	2	2	

Location		Loc Qty	Loc Code	
ST291		1216		
	115108	16		
	117423	300		
	118378	400		X2
	118910	500		

Dart Aerospace Ltd

W/O:		WORK ORDER CHANGES					
DATE	STEP	PROCEDURE CHANGE	By	Date	Qty	Approval Chief Eng / Prod Mgr	Approval QC Inspector

Part No: _____ **PAR #:** _____ **Fault Category:** _____ **NCR:** Yes No **DQA:** _____ **Date:** _____

Resolution: _____ **Disposition:** _____ **QA: N/C Closed:** _____ **Date:** _____

NCR:		WORK ORDER NON-CONFORMANCE (NCR)						
DATE	STEP	Description of NC Section A	Corrective Action Section B			Verification Section C	Approval Chief Eng	Approval QC Inspector
			Initial Chief Eng	Action Description Chief Eng	Sign & Date			

NOTE: Date & initial all entries

H:\FORMS\Quality Assurance\approved QA\NCRWO RevE

Picklist Print

Tuesday, September 27, 2011 12:29:43 PM

Work Order ID: 74223

Parent Item: D206-642-151

Parent Item Name: Replacement Skidtube

Start Date: 10/3/2011 **Required Date:** 11/4/2011

Start Qty: 1.00 **Required Qty:** 1.00

MS21042L3 Nut	Purchased	No	280	Each	8,411.000	7	7	

Location		Loc Qty	Loc Code	
ST300		2411		
	117441	16		
	117601	240		
	117885	155		
	118451	1000		
	118927	1000		
ST516		6000		X7
	119017	6000		

D3805-045 Wearplate Assembly Aft, Low Gear	Manufactured	No	280	Each	6.0000	1	1	374895(x1)

Location		Loc Qty	Loc Code	
FP		6		
	70878	6		

AN960JD10L NAS1149D0332J Washer	Purchased	No	280	Each	0.0000	2	2	(x2)
				x1 117087				
AN3-37A Bolt	Purchased	No	280	Each	261.0000	7	7	

Location		Loc Qty	Loc Code	
ST353		211		
	111668	111		X7
	118628	100		
ST354		50		
	117619	50		

Dart Aerospace Ltd

W/O:		WORK ORDER CHANGES					
DATE	STEP	PROCEDURE CHANGE	By	Date	Qty	Approval Chief Eng / Prod Mgr	Approval QC Inspector

Part No: _____ **PAR #:** _____ **Fault Category:** _____ **NCR:** Yes No **DQA:** _____ **Date:** _____

Resolution: _____ **Disposition:** _____ **QA: N/C Closed:** _____ **Date:** _____

NCR:		WORK ORDER NON-CONFORMANCE (NCR)						
DATE	STEP	Description of NC Section A	Corrective Action Section B			Verification Section C	Approval Chief Eng	Approval QC Inspector
			Initial Chief Eng	Action Description Chief Eng	Sign & Date			

NOTE: Date & initial all entries

Picklist Print

Tuesday, September 27, 2011 12:29:43 PM

Work Order ID: 74223

Parent Item: D206-642-151

Parent Item Name: Replacement Skidtube

Start Date: 10/3/2011 **Required Date:** 11/4/2011

Start Qty: 1.00 **Required Qty:** 1.00

NAS1149D0363J	Purchased	No	280	Each	4,404.000	7	7	
Washer								

Location		Loc Qty	Loc Code	
ST298		4404		
	117601	274		
	118077	1130		
	118612	1000		V7
	118968	2000		

Dart Aerospace Ltd

W/O:		WORK ORDER CHANGES					
DATE	STEP	PROCEDURE CHANGE	By	Date	Qty	Approval Chief Eng / Prod Mgr	Approval QC Inspector

Part No: _____ **PAR #:** _____ **Fault Category:** _____ **NCR:** Yes No **DQA:** _____ **Date:** _____

Resolution: _____ **Disposition:** _____ **QA: N/C Closed:** _____ **Date:** _____

NCR:		WORK ORDER NON-CONFORMANCE (NCR)						
DATE	STEP	Description of NC Section A	Corrective Action Section B			Verification Section C	Approval Chief Eng	Approval QC Inspector
			Initial Chief Eng	Action Description Chief Eng	Sign & Date			

NOTE: Date & initial all entries

H:\fFORMS\Quality Assurance\approved QA\NCRWO RevE

ITEM	Qty -041	Qty -043	Part Number	Description
1	X		D3804-041	SKIDTUBE ASSEMBLY, 206 A/B LOW
2		X	D3804-043	SKIDTUBE ASSEMBLY, 206 A/B HIGH
5	1	1	D2600-1-160	EXTRUSION
6	1	1	D2646	AFT CAP
7	1	1	D2647	CAP
8	19	20	D2649	CROSS BOLT SPACER
9	6	8	D2651-1	PLUG
10	6	8	D2651-3	O-RING
11		1	D2654-3	WEB
12	1		D2654-1	WEB
13	1	1	D2680-041	NUT PLATE
14	2	2	D3286-1	DOUBLER
15	2	2	D3286-3	STUD
21	2	2	AN960JD10L	WASHER
22	1	1	AN960JD416	WASHER
23	2	2	CCR264SS3-3	RIVET
24	2	2	CR3212-4-03	RIVET
25	52	52	CR3212-4-04	RIVET
26	2	2	MS27039-1-08	SCREW
27	1	1	MS27039-4-06	SCREW

NOTES

1) MATERIAL: N/A
2) FINISH: -CHEMICAL CONVERSION COAT PER DART QSI 005 4.1
   -POWDER COAT WHITE (4.3.5.1) PER DART QSI 005 4.3
3) BLACK ANTI-SKID PAINT AS INDICATED TO 0.5 ABOVE LOCATION RIDGE PER DART QSI 005 4.4
4) TOLERANCES ARE PER DART QSI 018 UNLESS OTHERWISE NOTED
5) UNITS: INCHES UNLESS OTHERWISE NOTED
6) BREAK SHARP EDGES: 0.005 TO 0.010 MAX
7) IDENTIFICATION: NONE
8) WEIGHT: 12.5 lb
9) WELD PER DART QSI 004
10) BENDING: DAMAGE TOLERANCE ON FWD BEND:
    THERE SHOULD BE NO VISIBLE WRINKLES IN THE BEND FROM THE GROUND TO A HEIGHT OF 5 INCHES ABOVE THE GROUND. IT IS ACCEPTABLE TO POLISH OUT GOUGES UP TO 0.020 DEEP IN THE BENT PORTION OF THE TUBE. A MAXIMUM REDUCTION IN DIAMETER OF 0.150" IS ACCEPTABLE IN THE BENT PORTION OF THE TUBE.
11) BOND WEB INTO OUTER TUBE WITH SIKAFLEX-241/-291 ADHESIVE PER DART QSI 015
12) INSERT D2651-1 PLUG C/W D2651-3 O-RING IN HOLES MARKED 'P' (BOTH SIDES OF TUBE)

#74223

RELEASED
09.03.09
per ECN 09-536

REV.	DESCRIPTION	BY	DATE
A	NEW ISSUE	MB	08.07.07

DESIGN		DART AEROSPACE USA, INC PORT HADLOCK, WA	
DRAWN			
CHECKED		DRAWING NO.	REV. A
MFG. APPR.		D3804	SHEET 1 OF 5
APPROVED		TITLE	SCALE
DE APPR.		SKIDTUBE ASSEMBLY, 206A/B	NTS
DATE	08.07.07		

Dart Aerospace Ltd

W/O:		WORK ORDER CHANGES					
DATE	STEP	PROCEDURE CHANGE	By	Date	Qty	Approval Chief Eng / Prod Mgr	Approval QC Inspector

Part No: _____ **PAR #:** _____ **Fault Category:** _____ **NCR:** Yes No **DQA:** _____ **Date:** _____

Resolution: _____ **Disposition:** _____ **QA: N/C Closed:** _____ **Date:** _____

NCR:		WORK ORDER NON-CONFORMANCE (NCR)						
DATE	STEP	Description of NC Section A	Corrective Action Section B			Verification Section C	Approval Chief Eng	Approval QC Inspector
			Initial Chief Eng	Action Description Chief Eng	Sign & Date			

NOTE: Date & initial all entries

RELEASED
09.03.03

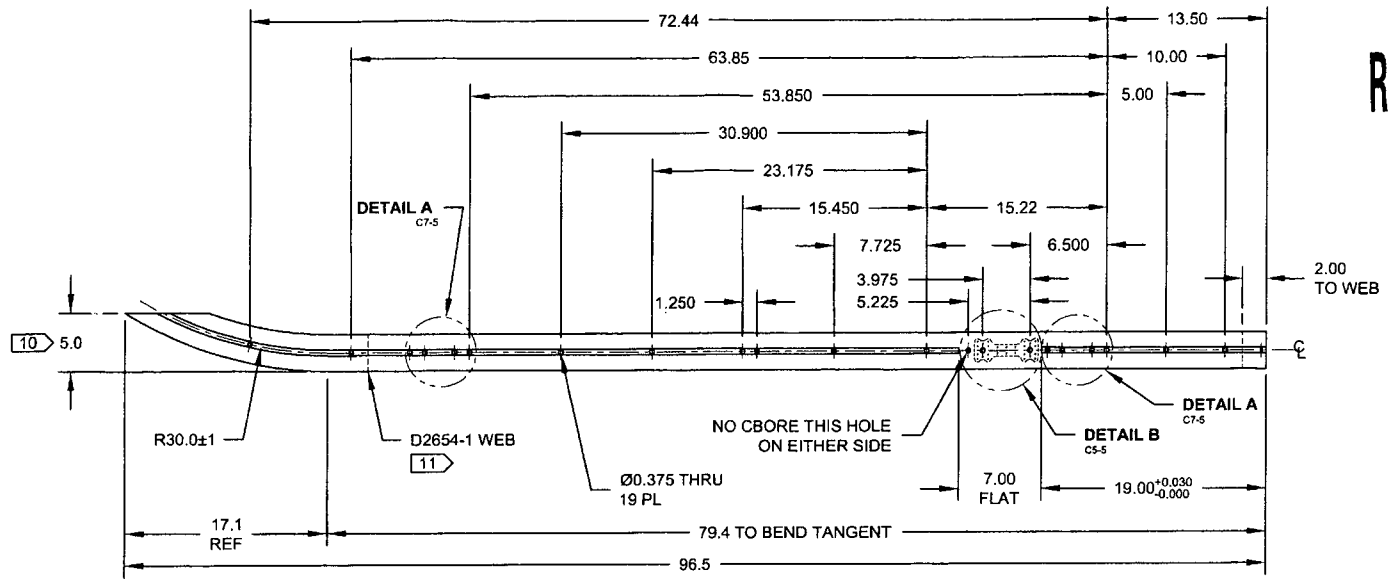

D3804-041 BENDING/DRILLING DETAIL

#74223

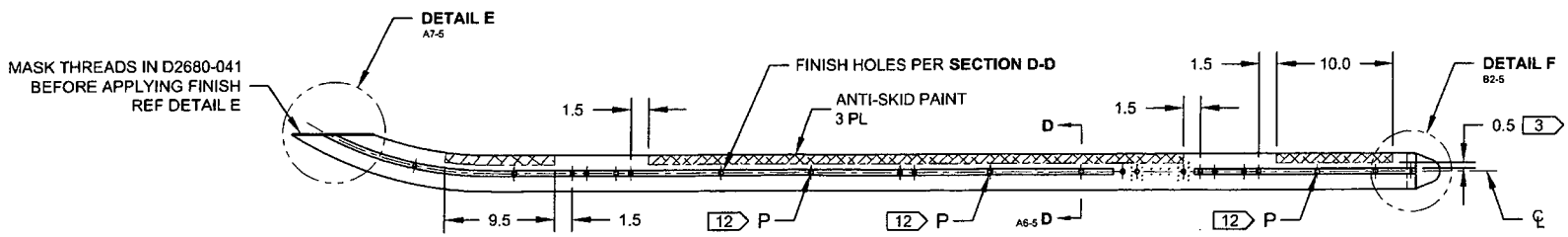

D3804-041 ASSEMBLY/FINISHING DETAIL

DESIGN		**DART AEROSPACE USA, INC** PORT HADLOCK, WA
DRAWN		
CHECKED		DRAWING NO. REV. A
MFG. APPR.		D3804 SHEET 2 OF 5
APPROVED		TITLE SCALE
DE APPR.		SKIDTUBE ASSEMBLY, 206A/B NTS
DATE 08.07.07		

Dart Aerospace Ltd

W/O:		WORK ORDER CHANGES					
DATE	STEP	PROCEDURE CHANGE	By	Date	Qty	Approval Chief Eng / Prod Mgr	Approval QC Inspector

Part No: _____ **PAR #:** _____ **Fault Category:** _____ **NCR:** Yes No **DQA:** _____ **Date:** _____

Resolution: _____ **Disposition:** _____ **QA: N/C Closed:** _____ **Date:** _____

NCR:		WORK ORDER NON-CONFORMANCE (NCR)						
DATE	STEP	Description of NC Section A	Corrective Action Section B			Verification Section C	Approval Chief Eng	Approval QC Inspector
			Initial Chief Eng	Action Description Chief Eng	Sign & Date			

NOTE: Date & initial all entries

RELEASED 09.03.03

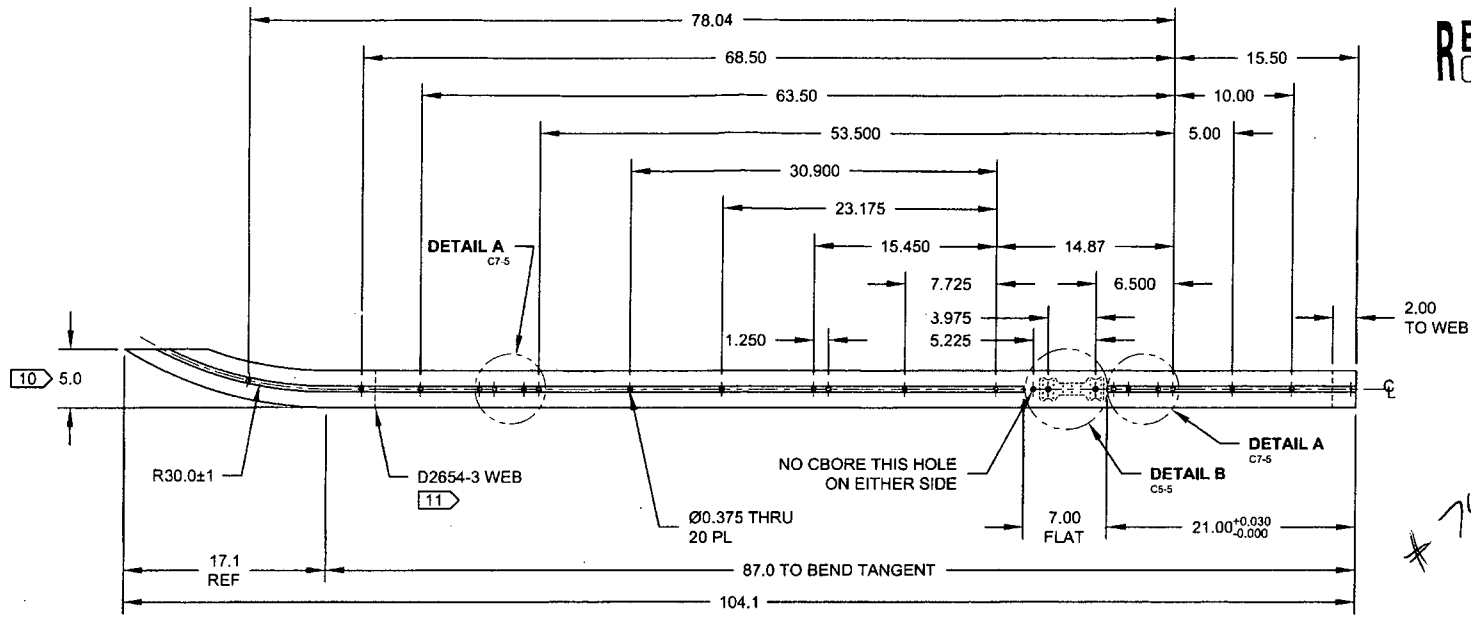

D3804-043 BENDING/DRILLING DETAIL

#74223

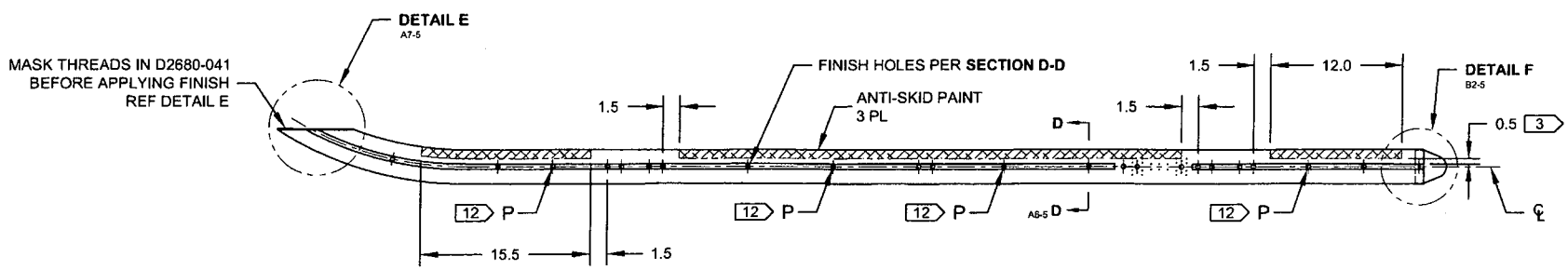

D3804-043 ASSEMBLY/FINISHING DETAIL

DESIGN		**DART AEROSPACE USA, INC** PORT HADLOCK, WA
DRAWN		
CHECKED		DRAWING NO. D3804 — REV. A — SHEET 3 OF 5
MFG. APPR.		
APPROVED		TITLE: SKIDTUBE ASSEMBLY, 206A/B — SCALE: NTS
DE APPR.		
DATE	08.07.07	

Dart Aerospace Ltd

W/O:		WORK ORDER CHANGES					
DATE	STEP	PROCEDURE CHANGE	By	Date	Qty	Approval Chief Eng / Prod Mgr	Approval QC Inspector

Part No: _____ **PAR #:** _____ **Fault Category:** _____ **NCR:** Yes No **DQA:** _____ **Date:** _____

Resolution: _____ **Disposition:** _____ **QA: N/C Closed:** _____ **Date:** _____

NCR:		WORK ORDER NON-CONFORMANCE (NCR)						
DATE	STEP	Description of NC Section A	Corrective Action Section B			Verification Section C	Approval Chief Eng	Approval QC Inspector
			Initial Chief Eng	Action Description Chief Eng	Sign & Date			

NOTE: Date & initial all entries

H:\fFORMS\Quality Assurance\approved QA\NCRWO RevE

RELEASED
09.03.03

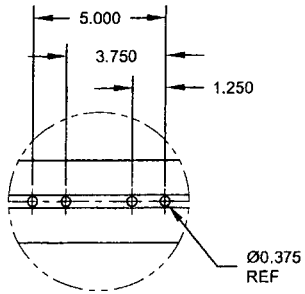

DETAIL A D6-2 C2-2 D6-3 C2-3
SCALE NONE

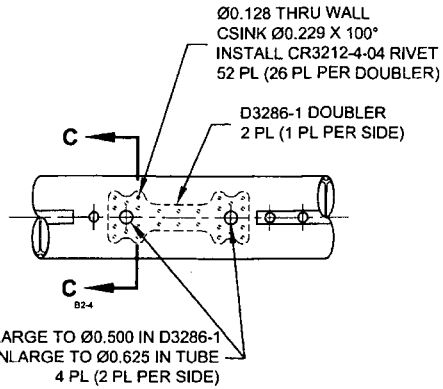

DETAIL B C3-2 C3-3
SCALE NONE

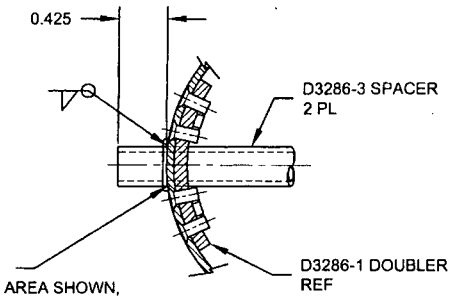

TO INSTALL D3286-1/-3:
1. GRIND OFF FLANGE IN AREA SHOWN, FLUSH WITH OUTSIDE SURFACE OF ROUND TUBE
2. LOCATE & DRILL D3286-1 DOUBLER USING DT3286-1T1
3. ENLARGE HOLES IN D3286-1 TO Ø0.500
4. ENLARGE HOLES IN TUBE TO Ø0.625 AND CHAMFER HOLE 0.03 X 45°
5. RIVET D3286-1 TO TUBE
6. INSERT D3286-3 SPACER
7. WELD IN PLACE AND GRIND FLUSH

#74223

SECTION C-C C6-4
PARTIAL SECTION
SCALE NONE

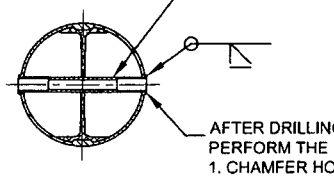

AFTER DRILLING AND BENDING ASSEMBLY PERFORM THE FOLLOWING FOR Ø0.375 HOLES ONLY:
1. CHAMFER HOLE 0.03 X 45°
2. INSERT D2649 SPACER
3. WELD INTO PLACE AND GRIND FLUSH
4. CBORE TO Ø0.313 X 0.75 DP (EXCEPT WHERE INDICATED)

SECTION D-D A4-2 A4-3
FOR Ø0.375 HOLES ONLY
SCALE NONE

DESIGN		**DART AEROSPACE USA, INC** PORT HADLOCK, WA	
DRAWN			
CHECKED		DRAWING NO.	REV. A
MFG. APPR.		D3804	SHEET 4 OF 5
APPROVED		TITLE	SCALE
DE APPR.		SKIDTUBE ASSEMBLY, 206A/B	NTS
DATE	08.07.07		

Dart Aerospace Ltd

W/O:		WORK ORDER CHANGES					
DATE	STEP	PROCEDURE CHANGE	By	Date	Qty	Approval Chief Eng / Prod Mgr	Approval QC Inspector

Part No: _____ **PAR #:** _____ **Fault Category:** _____ **NCR:** Yes No **DQA:** _____ **Date:** _____

Resolution: _____ **Disposition:** _____ **QA: N/C Closed:** _____ **Date:** _____

NCR:		WORK ORDER NON-CONFORMANCE (NCR)						
DATE	STEP	Description of NC Section A	Corrective Action Section B			Verification Section C	Approval Chief Eng	Approval QC Inspector
			Initial Chief Eng	Action Description Chief Eng	Sign & Date			

NOTE: Date & initial all entries

RELEASED 09.03.07

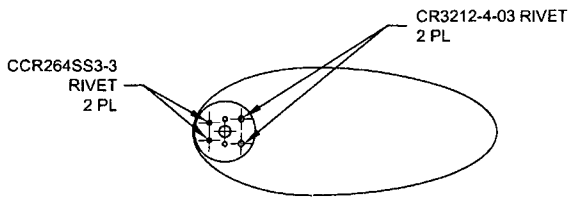

VIEW G-G A7-5
SCALE NONE

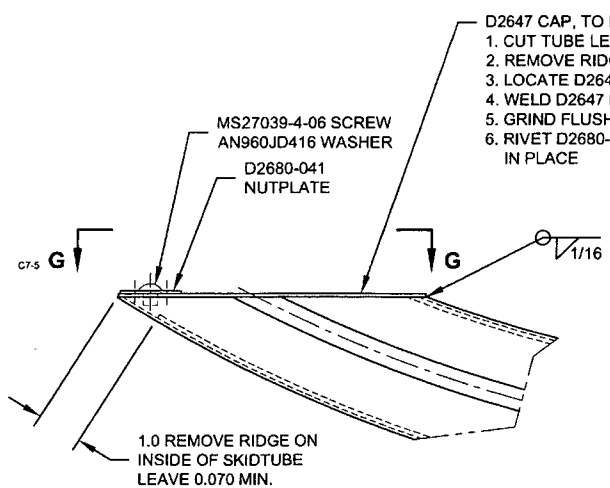

DETAIL E B7-2 B7-3
SCALE NONE

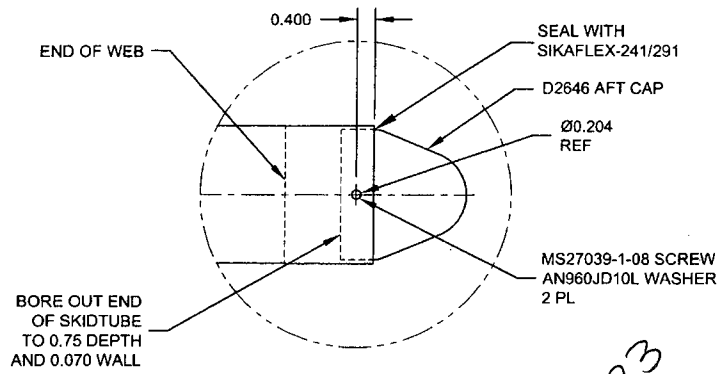

DETAIL F B2-2 B2-3
SCALE NONE

A74223

DESIGN		**DART AEROSPACE USA, INC** PORT HADLOCK, WA	
DRAWN			
CHECKED		DRAWING NO.	REV. A
MFG. APPR.		D3804	SHEET 5 OF 5
APPROVED		TITLE	SCALE
DE APPR.		SKIDTUBE ASSEMBLY, 206A/B	NTS
DATE	08.07.07		

Dart Aerospace Ltd

W/O:		WORK ORDER CHANGES					
DATE	STEP	PROCEDURE CHANGE	By	Date	Qty	Approval Chief Eng / Prod Mgr	Approval QC Inspector

Part No: _____ **PAR #:** _____ **Fault Category:** _____ **NCR:** Yes No **DQA:** _____ **Date:** _____

Resolution: _____ **Disposition:** _____ **QA: N/C Closed:** _____ **Date:** _____

NCR:		WORK ORDER NON-CONFORMANCE (NCR)						
DATE	STEP	Description of NC Section A	Corrective Action Section B			Verification Section C	Approval Chief Eng	Approval QC Inspector
			Initial Chief Eng	Action Description Chief Eng	Sign & Date			

NOTE: Date & initial all entries

H:\fFORMS\Quality Assurance\approved QA\NCRWO RevE

NO. 273

AWS D17.1.2001
QUALIFICATION TEST RECORD

Name: Barclay Elliott
Job number: 74236
Part number: D206 642 151
Description: 206 skid tube
Welding Process: Tig[X] Mig[ ]
Base materiel: Aluminum
Current: AC[X] DC[ ]

TEST REQUIREMENTS AND RESULTS

Visual:	pass[X]	fail[ ]
Penetration:	pass[X]	fail[ ]

UNACCEPTABLE

Cracks:	pass[X]	fail[ ]
Undercut:	pass[X]	fail[ ]
Pin holes:	pass[X]	fail[ ]
Overlap (cold lap)	pass[X]	fail[ ]
Porosity (surface):	pass[X]	fail[ ]
Coloration:	pass[X]	fail[ ]

Qualifier [signature] **Date of Test Coupon** 11-10-25

Welder Barclay Elliott **Date of Test Coupon** 11-10-25

The above named individual is qualified in accordance with AWS D17.1.2001 to weld